TYPICAL HEAD & JAMB DETAILS

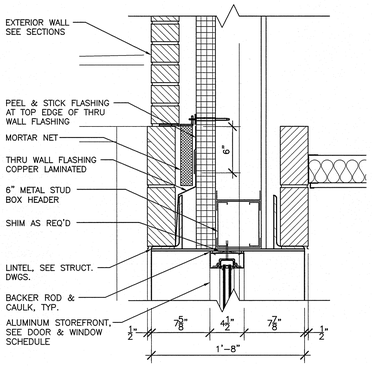

1 EXTERIOR HEAD
SCALE: 1 1/2"= 1'-0"

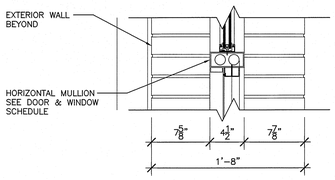

2 HORIZONTAL MULLION
SCALE: 1 1/2"= 1'-0"

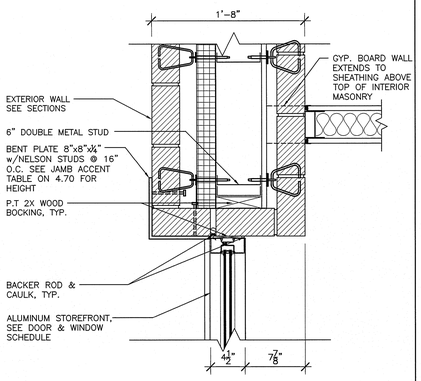

3 EXTERIOR JAMB
SCALE: 1 1/2"= 1'-0"

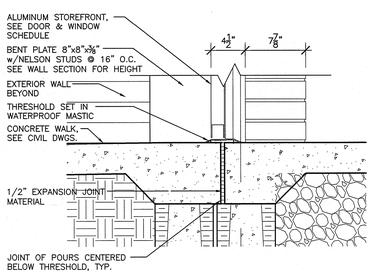

4 EXTERIOR SILL
SCALE: 1 1/2"= 1'-0"

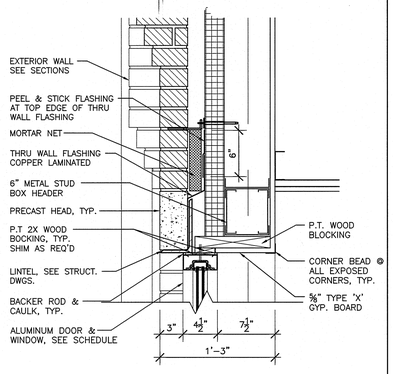

5 EXTERIOR HEAD
SCALE: 1 1/2"= 1'-0"

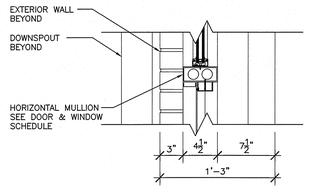

6 HORIZONTAL MULLION
SCALE: 1 1/2"= 1'-0"

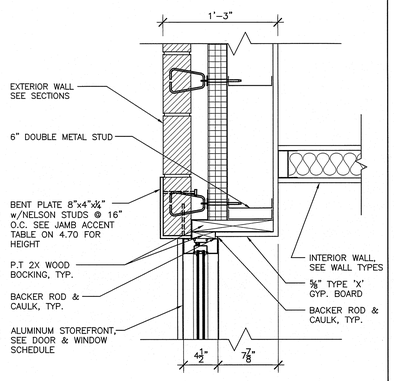

7 EXTERIOR JAMB
SCALE: 1 1/2"= 1'-0"

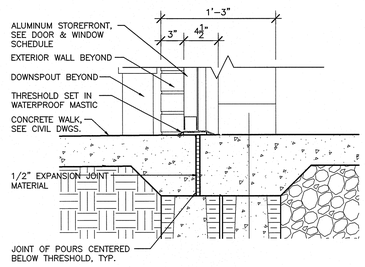

8 EXTERIOR SILL
SCALE: 1 1/2"= 1'-0"

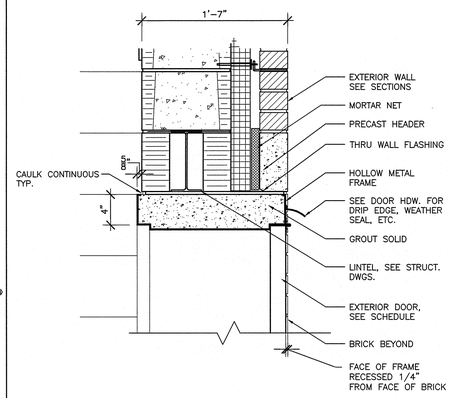

9 EXTERIOR HEAD
SCALE: 1 1/2"= 1'-0"

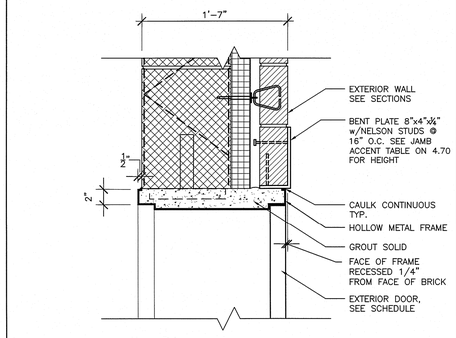

10 EXTERIOR JAMB
SCALE: 1 1/2"= 1'-0"

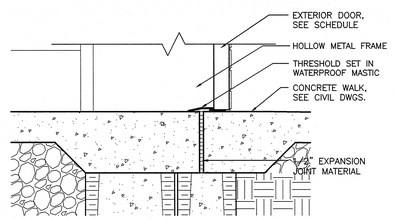

11 EXTERIOR SILL
SCALE: 1 1/2"= 1'-0"

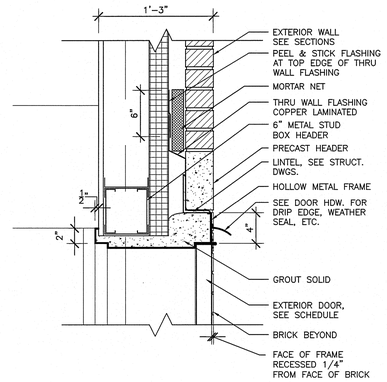

12 EXTERIOR HEAD
SCALE: 1 1/2"= 1'-0"

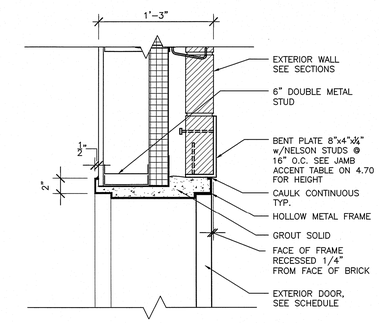

13 EXTERIOR JAMB
SCALE: 1 1/2"= 1'-0"

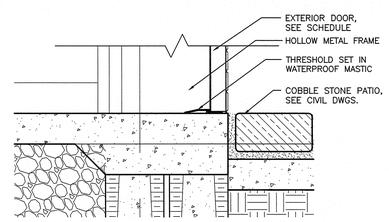

14 EXTERIOR SILL
SCALE: 1 1/2"= 1'-0"

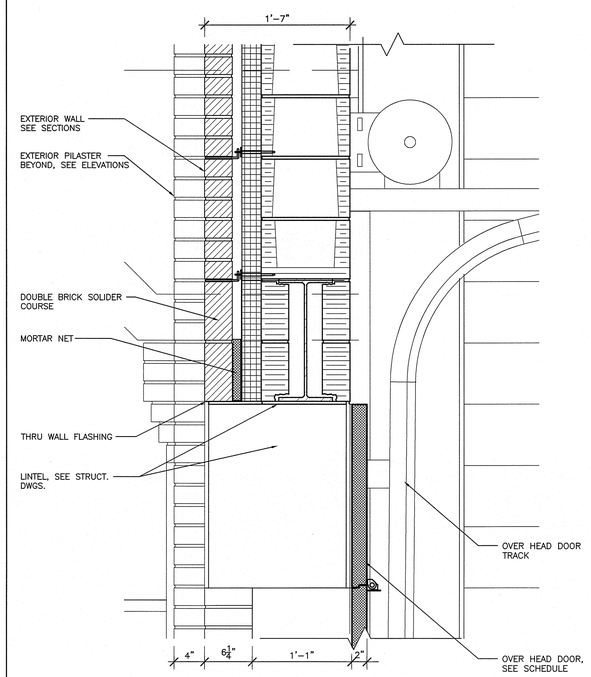

15 EXTERIOR HEAD
SCALE: 1 1/2"= 1'-0"

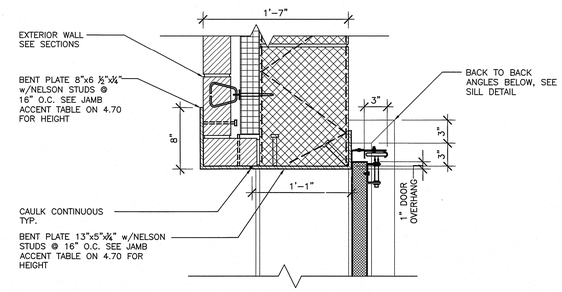

16 EXTERIOR JAMB
SCALE: 1 1/2"= 1'-0"

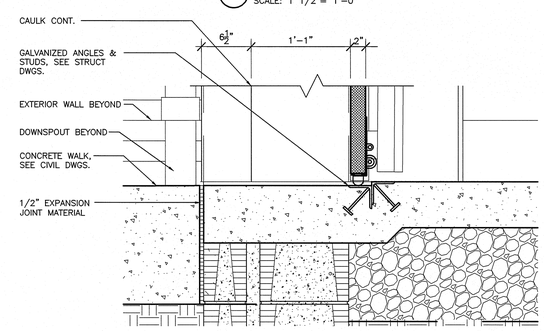

17 EXTERIOR SILL
SCALE: 1 1/2"= 1'-0"

NOTE

ALL NOTES APPLY TO ALL DRAWINGS AND ALL TRADES. IT IS THE RESPONSIBILITY OF ALL CONTRACTORS AND TRADES TO COORDINATE THE INSTALLATION OF THEIR WORK WITH THE INSTALLATION OF WORK BY ALL OTHER CONTRACTORS AND TRADES. THE REQUIREMENTS OF THE DRAWINGS, GENERAL REQUIREMENTS AND ALL ITEMS OF THE CONTRACT DOCUMENTS ARE EQUALLY BINDING ON ALL CONTRACTORS AND TRADES. EACH CONTRACTOR IS REQUIRED TO MAINTAIN FULL SETS OF THE CONTRACT DOCUMENTS FOR HIS EMPLOYEES USE ON THE PROJECT TO ASSURE THAT ALL WORK IS PROPERLY COORDINATED AND INSTALLED WITH THE WORK OF OTHER CONTRACTORS AND TRADES.

WHENEVER THERE ARE DISCREPANCIES BETWEEN DRAWINGS, OR BETWEEN THE DRAWINGS AND SPECIFICATIONS, OR CONFLICTS WITHIN THE SPECIFICATIONS, AND SUCH DISCREPANCY IS NOT CALLED TO THE ARCHITECT'S ATTENTION IN TIME TO PERMIT CLARIFICATION BY ADDENDUM, THE CONTRACTOR SHALL BASE HIS BID UPON PROVIDING THE BETTER QUALITY OR GREATER OF WORK OR MATERIAL CALLED FOR, SHALL SUBMIT A WRITTEN STATEMENT WITH HIS PROPOSAL NOTING SUCH DISCREPANCIES, AND SHALL SO FURNISH AND INSTALL SUCH BETTER QUALITY OR GREATER QUANTITY UNLESS OTHERWISE ORDERED IN WRITING.

Project No.
1362

Date
12.19.2012
Drawn
PMF
Checked

Revisions

© STEWART–COOPER–NEWELL ARCHITECTS, P.A.

THIS DRAWING IS THE PROPERTY OF STEWART–COOPER–NEWELL ARCHITECTS, P.A. AND IS SUBJECT TO FEDERAL COPYRIGHT LAWS. THIS DRAWING MAY NOT BE REPRODUCED, PUBLISHED OR USED IN ANY WAY WITHOUT THE WRITTEN PERMISSION OF STEWART–COOPER–NEWELL ARCHITECTS, P.A.

Stewart · Cooper · Newell Architects
719 East Second Avenue
Gastonia, NC 28054
Phone: 704.865.6311
Fax: 704.865.0046
9133 Two Notch Road
Columbia, SC 29223
Phone: 803.765.9011
1.800.671.0621
www.scn-architects.com

COMMONWEALTH OF VIRGINIA
12/19/2012
Kenneth Charles Newell
No. 012718
ARCHITECT

City of Danville
PUBLIC SAFETY CENTRE
Danville, Virginia

HEAD, JAMB, & SILL DETAILS

sheet
4.73